DWG. NO.	SHT	REV
CR5103-OS	1	A

THIS DRAWING HAS BEEN GENERATED BY A CAD SYSTEM. CHANGES SHALL ONLY BE INCORPORATED AS DIRECTED BY THE DESIGN ACTIVITY. DO NOT REVISE MANUALLY.

REVISIONS

REV.	DESCRIPTION	ECO	DATE	APPROVED
A	INITIAL RELEASE	I.R.	06/25/15	P.T

RoHS 2002/95/EC

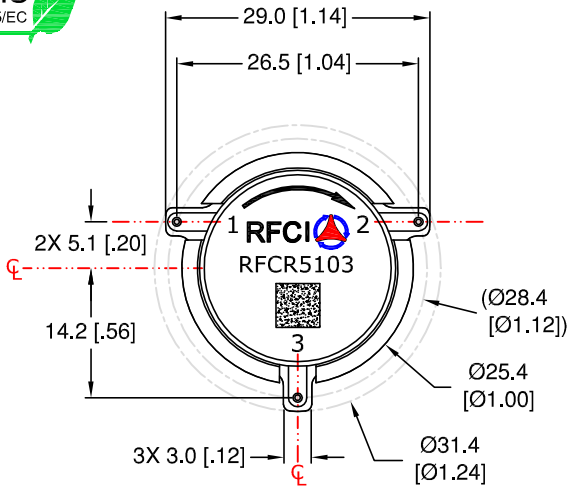

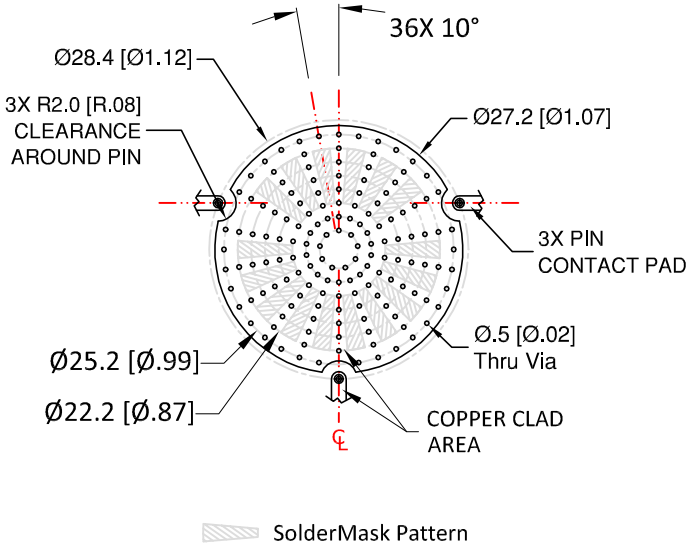

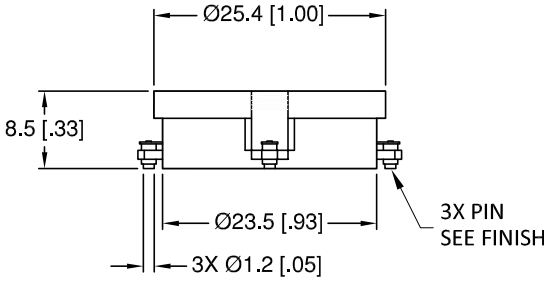

Recommended Footprint

Copper-SolderMask Pattern

The Land Pattern should be with good thermal conductivity

Finish:
1. Housing: Silver plated
2. Pin: Gold plated
3. Coplanarity specification: 0.10 [.004] MAX.

Specifications

Parameter	Minimum	Typical	Maximum
Frequency Range (MHz)	791		821
Insertion Loss (dB)		< .22	.30
Isolation (dB)	20	> 23	
Return Loss (dB)	20	> 23	
FWD IMD: 2T at 37W per T 5MHz Spacing (dBc)		75	

Power & Temperature Ratings

Parameter	Maximum
Forward PWR Peak/AVG	500/100 Watts
Reverse Power CW	100 Watts
Operating Temperature	-40 to +85° C
Storage Temperature	-50 to +125° C

NOTES:
1. Typical Values Represent Performance @ +23 °C.
2. S-Parameters to be measured by connecting Port 1 and 2 to VNA, and Port 3 to Load with return loss 30dB or higher

CW SMD CIRCULATOR MODEL: RFCR5103

UNLESS OTHERWISE SPECIFIED
ALL DIMENSIONS ARE IN MILLIMETERS [INCHES]:
TOLERANCES ARE:
1 PLACE DECIMAL ±.2 [±.01] | ANGULAR: ±1.0°
2 PLACE DECIMAL ±.10 [±.004] | SURFACE ROUGHNESS 16

REMOVE ALL BURRS AND BREAK SHARP EDGES.
SURFACE TEXTURE TO BE IN ACCORDANCE WITH LATEST ANSI B46.1
DIMENSIONING & TOLERANCING IN ACCORDANCE WITH LATEST ANSI Y14.5

DO NOT SCALE DRAWING

THIRD ANGLE PROJECTION

APPROVALS	DATE
DRAWN BY:	
CHECKED BY:	
DESIGN BY:	
ENGINEER BY:	
MFG. ENGR.	
Q.A.	
PROG. MGMT/MKT	

RFCI

TITLE
OUTLINE/SPECS

SIZE	CAGE NO.	DWG NO.	REV.
A		CR5103-OS	A

SCALE: FULL | SHEET 1 OF 1