DWG. NO.	SHT	REV
CR5811-OS	1	A

THIS DRAWING HAS BEEN GENERATED BY A CAD SYSTEM. CHANGES SHALL ONLY BE INCORPORATED AS DIRECTED BY THE DESIGN ACTIVITY. DO NOT REVISE MANUALLY.

REVISIONS

REV.	DESCRIPTION	ECO	DATE	APPROVED
A	INITIAL RELEASE	I.R.	06/25/15	P.T

RoHS 2002/95/EC

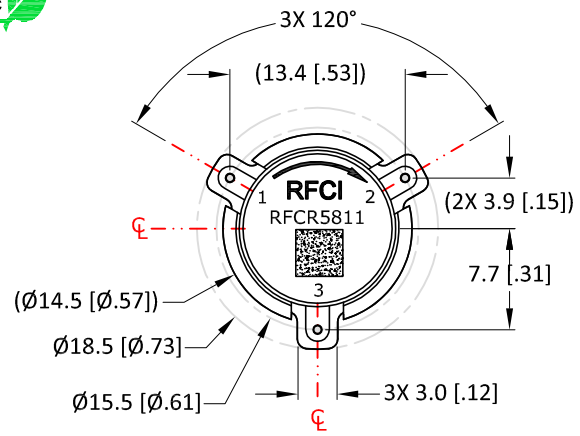

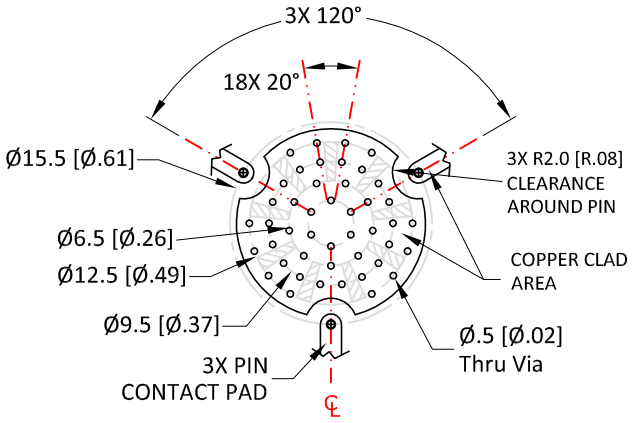

SolderMask Pattern

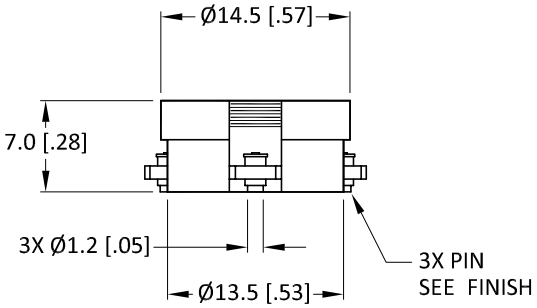

Recommended Footprint
Copper-Solder Mask Pattern

The Land Pattern should be with good thermal conductivity

Finish:
1. Housing: Silver plated
2. Pin: Gold plated
3. Coplanarity specification: 0.10 [.004] MAX.

Specifications

Parameter	Minimum	Typical	Maximum
Frequency Range (MHz)	2365		2435
Insertion Loss (dB)		< .25	.30
Isolation (dB)	20	> 23	
Return Loss (dB)	20	> 23	

Power & Temperature Ratings

Parameter	Maximum
Forward PWR Peak/AVG	500/100 Watts
Reverse Power CW	80 Watts
Operating Temperature	-40 to +85° C
Storage Temperature	-50 to +125° C

NOTES:
1. Typical Values Represent Performance @ +23 °C.
2. S-Parameters to be measured by connecting Port 1 and 2 to VNA, and Port 3 to Load with return loss 30dB or higher

CW SMD CIRCULATOR MODEL: RFCR5811

UNLESS OTHERWISE SPECIFIED
ALL DIMENSIONS ARE IN MILLIMETERS [INCHES]:
TOLERANCES ARE:
1 PLACE DECIMAL ±.2 [±.01] | ANGULAR: ±1.0°
2 PLACE DECIMAL ±.10 [±.004] | SURFACE ROUGHNESS 16

REMOVE ALL BURRS AND BREAK SHARP EDGES.
SURFACE TEXTURE TO BE IN ACCORDANCE WITH LATEST ANSI B46.1
DIMENSIONING & TOLERANCING IN ACCORDANCE WITH LATEST ANSI Y14.5

PROPRIETARY NOTE: "THE INFORMATION CONTAINED ON THIS DOCUMENT IS CONSIDERED TO BE CONFIDENTIAL MATERIAL PROPRIETARY TO RF CIRCULATOR ISOLATOR Inc. (RFCI) AND IS PROVIDED SOLELY FOR INFORMATION PURPOSES.
THIS INFORMATION SHALL NOT BE USED BY ANYONE OTHER THAN RFCI TO DESIGN OR CONSTRUCT ANY OF THE ITEMS DEPICTED, NOR SHALL IT BE DISCLOSED, DUPLICATED, OR COPIED FOR ANY PURPOSE, NOR MADE AVAILABLE TO ANY THIRD PARTY WITHOUT THE PRIOR WRITTEN CONSENT OF A RFCI OFFICIAL."

DO NOT SCALE DRAWING

THIRD ANGLE PROJECTION

APPROVALS	DATE
DRAWN BY:	
CHECKED BY:	
DESIGN BY:	
ENGINEER BY:	
MFG. ENGR.	
Q.A.	
PROG. MGMT/MKT	

RFCI

TITLE
OUTLINE/SPECS

SIZE	CAGE NO.	DWG NO.	REV.
A		CR5811-OS	A

SCALE: FULL | SHEET 1 OF 1